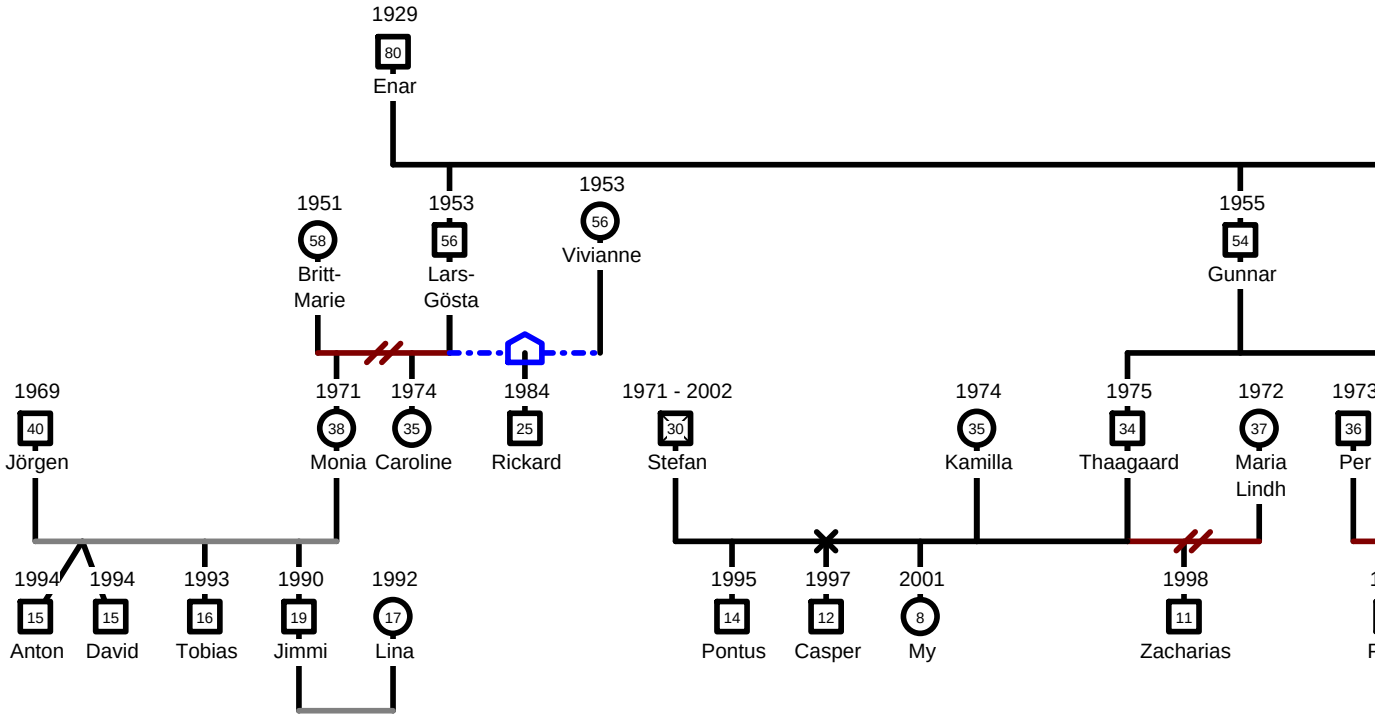
1929
80
Enar
1951
58
Britt-
Marie
1953
56
Lars-
Gösta
1953
56
Vivianne
1955
54
Gunnar
1969
40
Jörgen
1971
38
Monia
1974
35
Caroline
1984
25
Rickard
1971 - 2002
30
Stefan
1974
35
Kamilla
1975
34
Thaagaard
1972
37
Maria
Lindh
1973
36
Per
1994
15
Anton
1994
15
David
1993
16
Tobias
1990
19
Jimmi
1992
17
Lina
1995
14
Pontus
1997
12
Casper
2001
8
My
1998
11
Zacharias

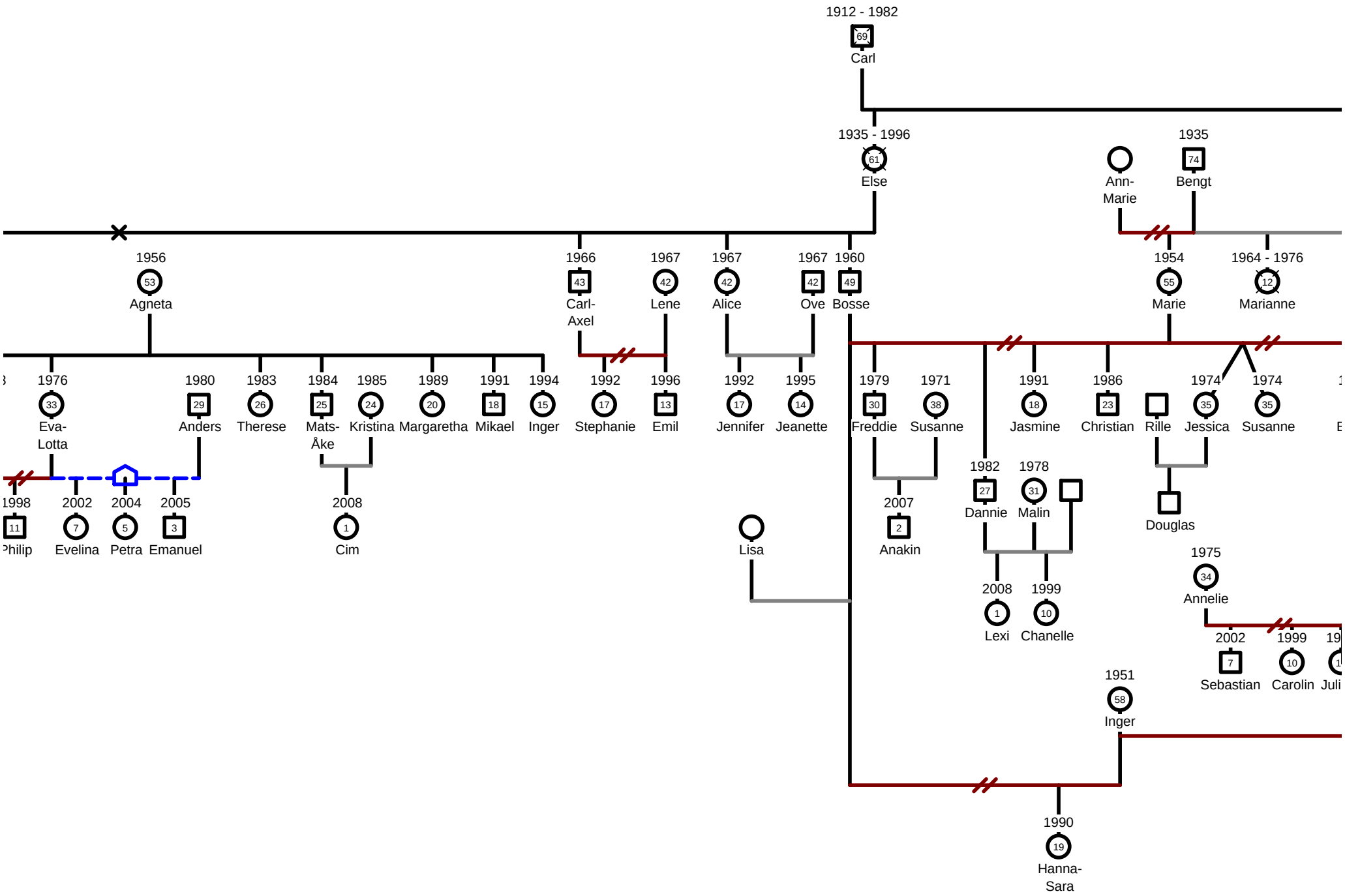
1912 - 1982
69
Carl
1935 - 1996
61
Else
1935
74
Bengt
Ann-
Marie
1956
53
Agneta
1966
43
Carl-
Axel
1967
42
Lene
1967
42
Alice
1967
42
Ove
1960
49
Bosse
1954
55
Marie
1964 - 1976
12
Marianne
1976
33
Eva-
Lotta
1980
29
Anders
1983
26
Therese
1984
25
Mats-
Åke
1985
24
Kristina
1989
20
Margaretha
1991
18
Mikael
1994
15
Inger
1992
17
Stephanie
1996
13
Emil
1992
17
Jennifer
1995
14
Jeanette
1979
30
Freddie
1971
38
Susanne
1991
18
Jasmine
1986
23
Christian
Rille
1974
35
Jessica
1974
35
Susanne
1998
11
Philip
2002
7
Evelina
2004
5
Petra
2005
3
Emanuel
2008
1
Cim
Lisa
2007
2
Anakin
1982
27
Dannie
1978
31
Malin
Douglas
2008
1
Lexi
1999
10
Chanelle
1975
34
Annelie
2002
7
Sebastian
1999
10
Carolin
1951
58
Inger
1990
19
Hanna-
Sara

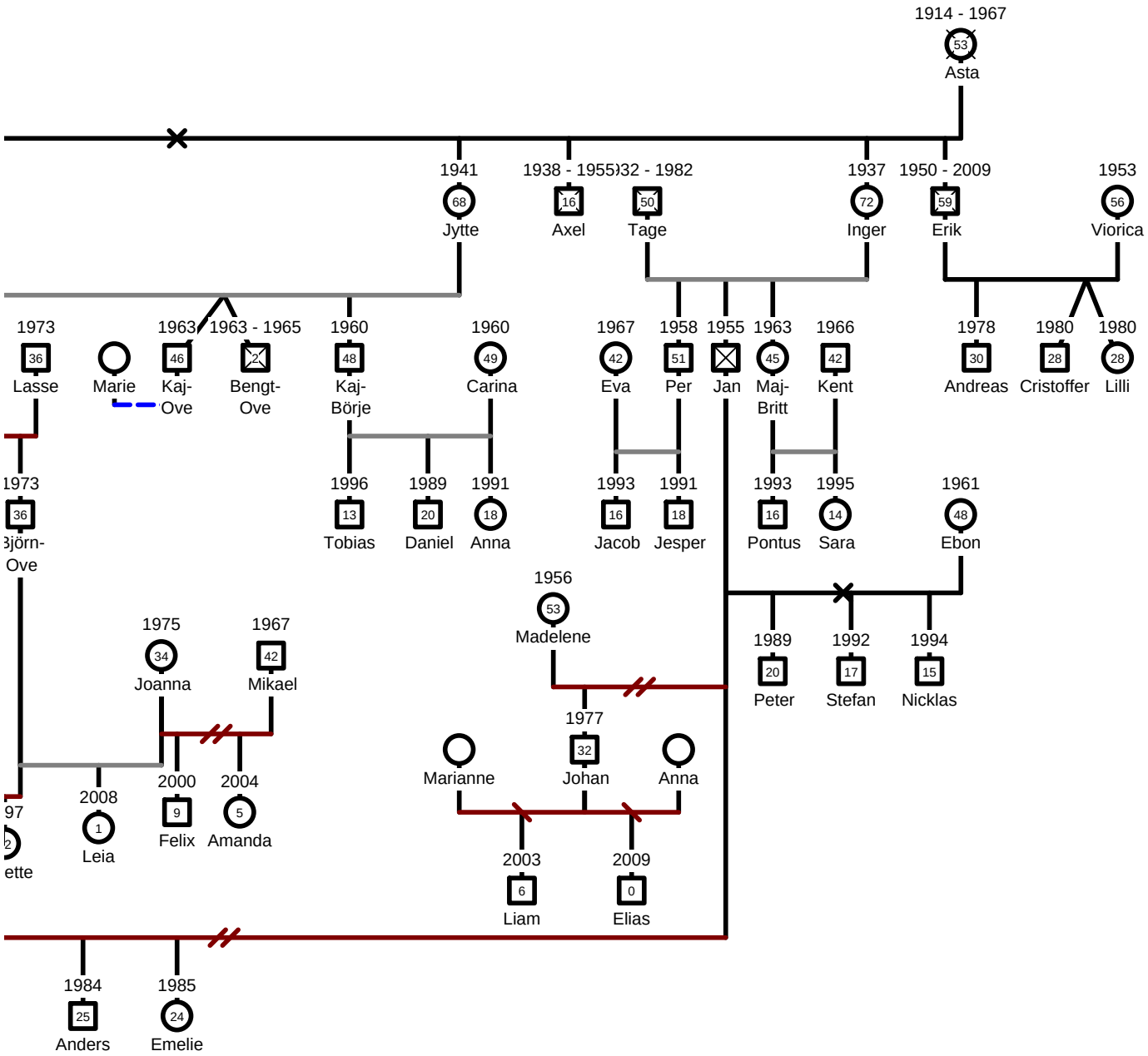
1914 - 1967
53
Asta
1941
68
Jytte
1938 - 1955
16
Axel
32 - 1982
50
Tage
1937
72
Inger
1950 - 2009
59
Erik
1953
56
Viorica
1973
36
Lasse
Marie
1963
46
Kaj-Ove
1963 - 1965
2
Bengt-Ove
1960
48
Kaj-Börje
1960
49
Carina
1967
42
Eva
1958
51
Per
1955
Jan
1963
45
Maj-Britt
1966
42
Kent
1978
30
Andreas
1980
28
Cristoffer
1980
28
Lilli
1973
36
Björn-Ove
1996
13
Tobias
1989
20
Daniel
1991
18
Anna
1993
16
Jacob
1991
18
Jesper
1993
16
Pontus
1995
14
Sara
1961
48
Ebon
1956
53
Madelene
1975
34
Joanna
1967
42
Mikael
1989
20
Peter
1992
17
Stefan
1994
15
Nicklas
1977
32
Johan
Marianne
Anna
2008
1
Leia
2000
9
Felix
2004
5
Amanda
2003
6
Liam
2009
0
Elias
1984
25
Anders
1985
24
Emelie